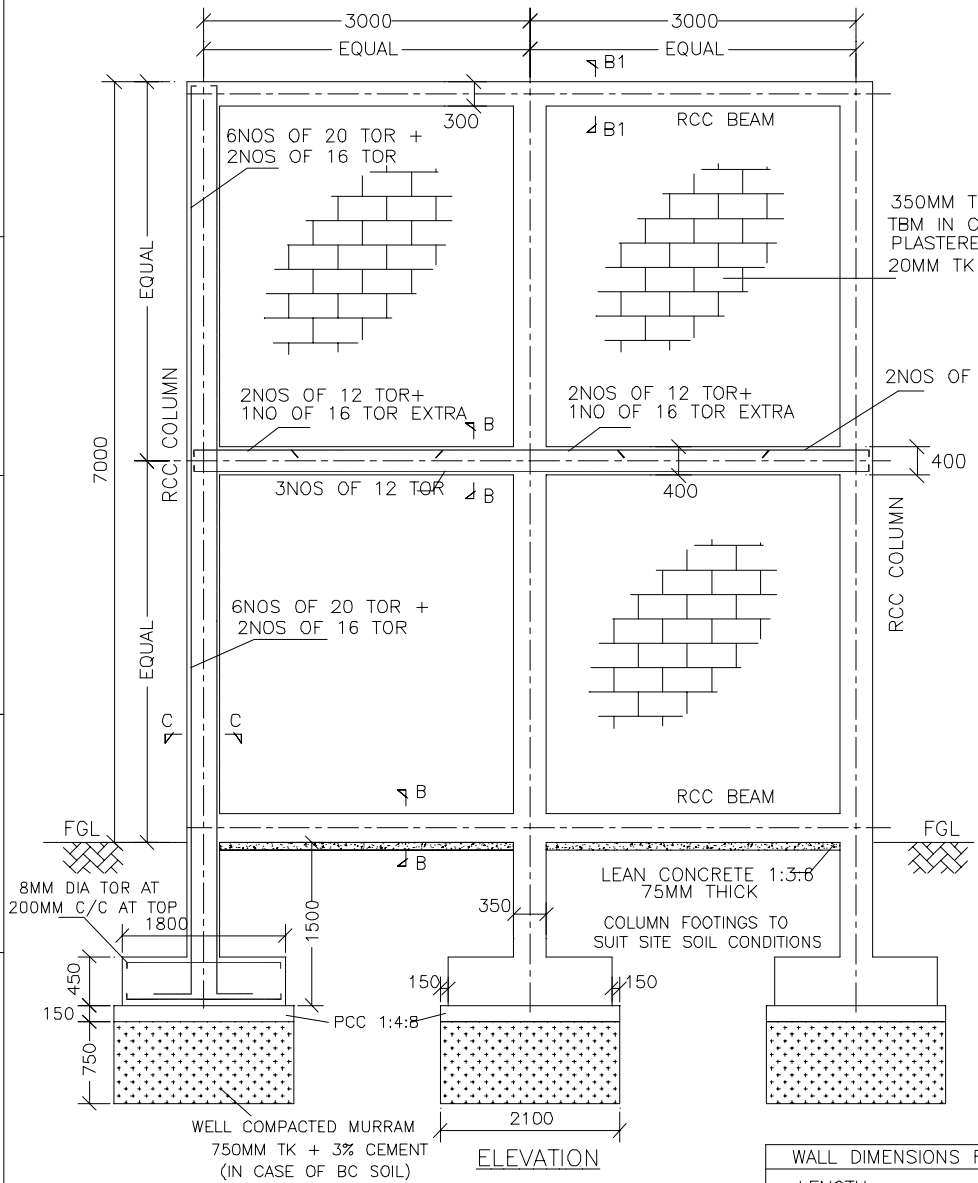

ELEVATION

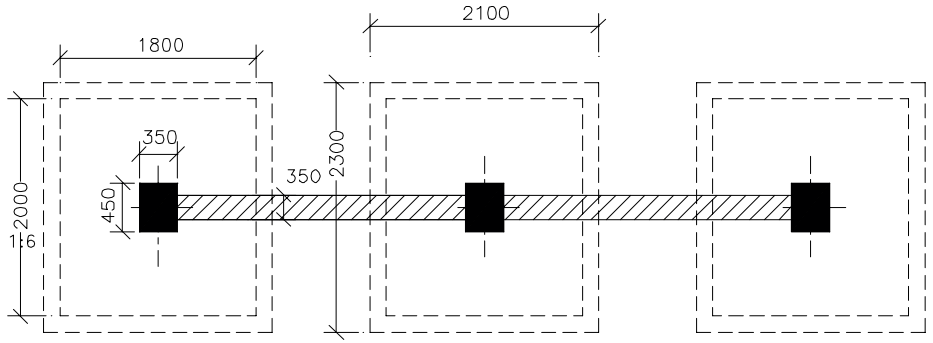

PLAN

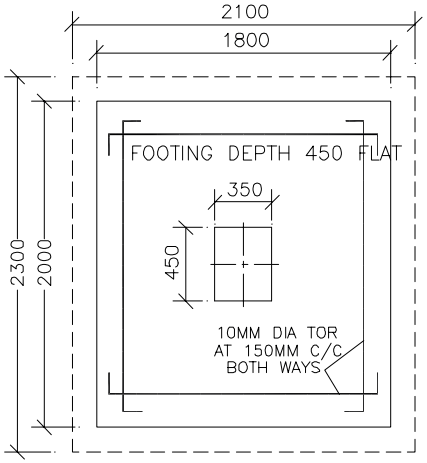

TYPICAL FOOTING DETAILS

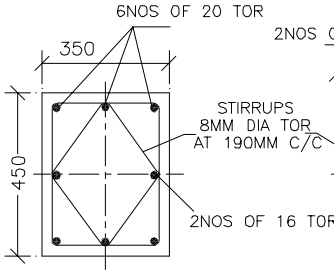

SECTION – CC

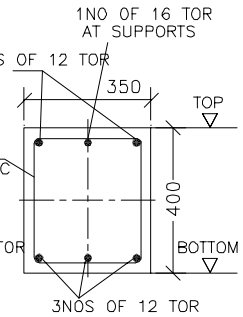

SECTION – BB

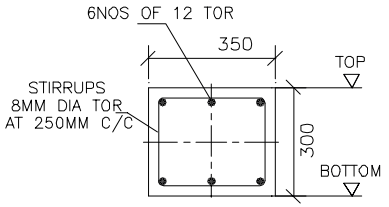

SECTION – B1 B1

NOTES:

1. ALL DIMENSIONS ARE IN MMS ONLY, UNLESS OTHERWISE SPECIFIED.
2. DONOT SCALEOUT THIS DRG, FOLLOW ONLY THE WRITTEN DIMENSIONS.
3. ANY DISCRIPENCY FOUND MAY PLEASE BE BROUGHT TO THE NOTICE OF THIS OFFICE BEFORE EXECUTION.
4. STEEL REINFORCEMENT SHALL CONFIRM TO IS 1786/1979 OF GRADE Fe 415.
5. STRUCTURAL CONCRETE SHALL BE M20 GRADE.
6. STEEL FABRICATION SHALL CONFIRM TO IS PROVISIONS.
7. WALL SHALL BE GIVEN WITH 2 COATS OF APEX/ANTI FUNGUS PAINT OVER ONE COAT OF PRIMER.

WALL DIMENSIONS FOR ESTIMATE PURPOSES	
LENGTH	UP TO 6000MM
HEIGHT ABOVE FGL	UP TO 7000MM
WALL DIMENSIONS ARE ONLY TYPICAL. FOR GREATER HEIGHTS ABOVE FGL, DESIGN SHALL BE OBTAINED FROM THIS OFFICE.	

WALL DIMENSIONS AS PER TAC REQUIREMENTS:

LENGTH: SHALL EXTEND 1.00MTS ON EITHER SIDE OF OUTER MOST PART OF POWER TRANSFORMER.

HEIGHT: SHALL EXTEND 1.00MTS ABOVE CONSERVATOR SAFETY VENT OF TRANSFORMER.

KARNATAKA POWER TRANSMISSION CORPN LTD					
FIRE PROTECTION WALL FOR TRANSFORMERS UP TO 20 MVA.					SHEET 1 OF 1
DRG NO: CEE (P & C) / SE (CIVIL) / 06-07/1 SCALE 66/ 009 B DATED:				NOT TO SCALE	
G.R.RAJU					
HDM/	AEE(C)	EE(T)	SE(T & P)	CHIEF ENGR ELE	PLANING AND CO ORDINATION
DRN	DGN	SUB	REC	APPROVED	